Comel

НАЛИВНОЙ ПАРОГЕНЕРАТОР НА 1 УТЮГ, НА 1,5 ЛИТРА

ИНСТРУКЦИЯ ПО ПРИМЕНЕНИЮ

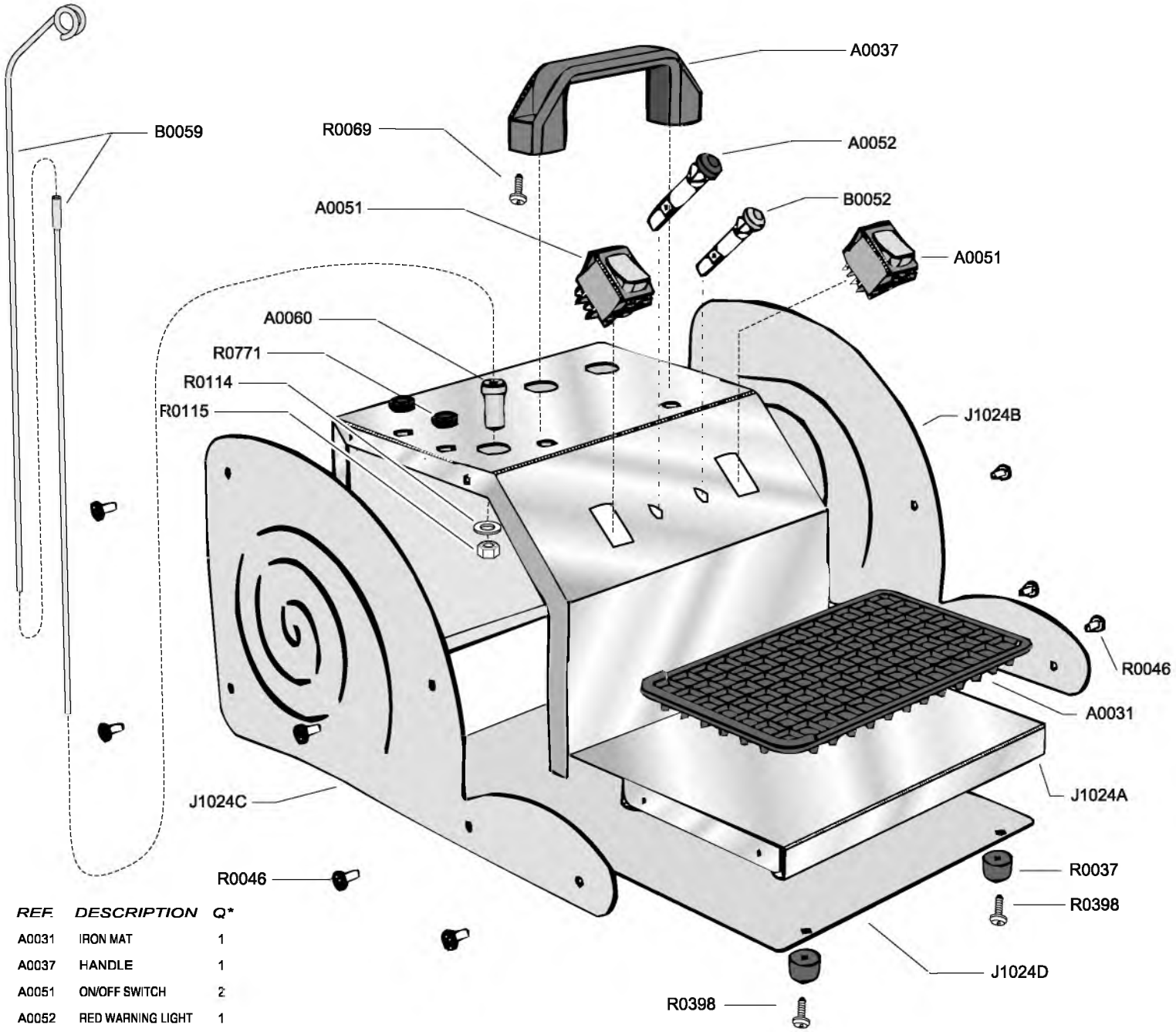

REF.	DESCRIPTION	Q*
A0031	IRON MAT	1
A0037	HANDLE	1
A0051	ON/OFF SWITCH	2
A0052	RED WARNING LIGHT	1
A0060	BUSHER	1
B0052	GREEN WARNING LIGHT	1
B0059	CABLE SUPPORT	1
J1024A	FRAME	1
J1024B	RIGHT PANEL	1
J1024C	LEFT PANEL	1
J1024D	LOWER PANEL	1
R0037	FOOT	4
R0046	SCREW	10
R0069	SCREW	2
R0114	WASHER	1
R0115	NUT	1
R0398	SCREW	4
R0771	RUBBER RING	1

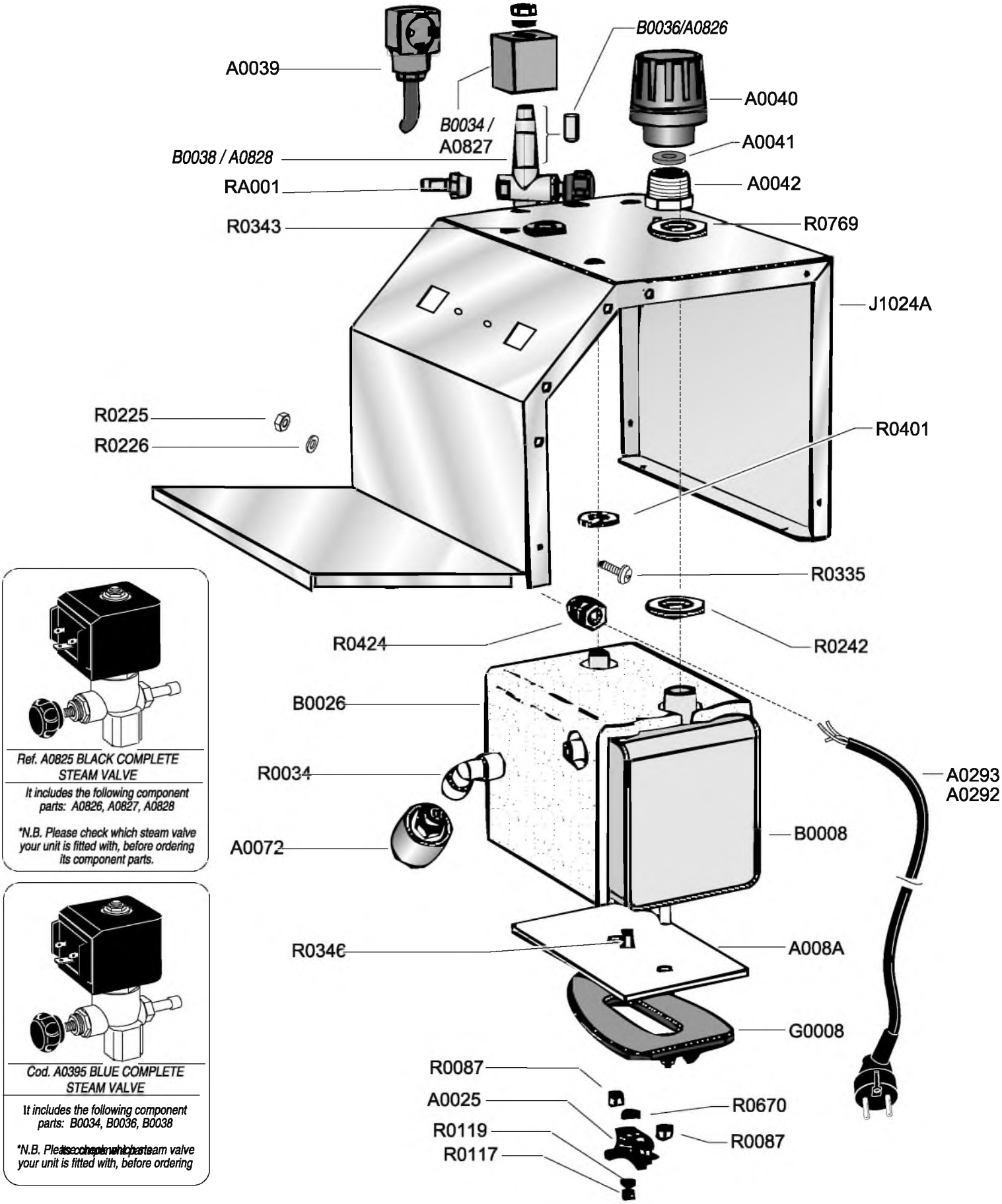

REF.	DESCRIPTION	Q**
A008A	ALUMINIUM PLATE	1
A0025	BOILER THERMOSTAT	1
A0039	CONNECTOR	1
A0040	FILLING TOP	1
A0041	WASHER	1
A0042	CONNECTOR	1
A0072	PRESSURE SWITCH	1
A0292	ELECTRICAL CABLE WITH ITALIAN PLUG	
A0293	ELETRICAL CABLE WITH SCHUKO PLUG	1
A0395*	COMPLETE STEAM VALVE	1
A0825*	COMPLETE STEAM VALVE	1
A0826*	PLUNGER	1

REF.	DESCRIPTION	Q**
A0827*	COIL	1
A0828*	STEAM VALVE CORE	1
B0008	INOX BOILER	1
B0026	BOILER INSULATION	1
B0034*	COIL	1
B0036*	PLUNGER	1
B0038*	STEAM VALVE CORE	1
G0008	HEATING ELEMENT	1
J1024A	FRAME	1
R0034	CONNECTOR	1
R0087	NUT	2
R0117	NUT	1

REF.	DESCRIPTION	Q**
R0119	WASHER	1
R0225	NUT	1
R0226	WASHER	1
R0242	WASHER	1
R0335	SCREW	1
R0343	WASHER	1
R0346	SCREW	1
R0401	WASHER	1
R0424	FLEX-TIGHTENING RING	1
R0670	WASHER	1
R0769	WASHER	1
RA001	CONNECTOR	1

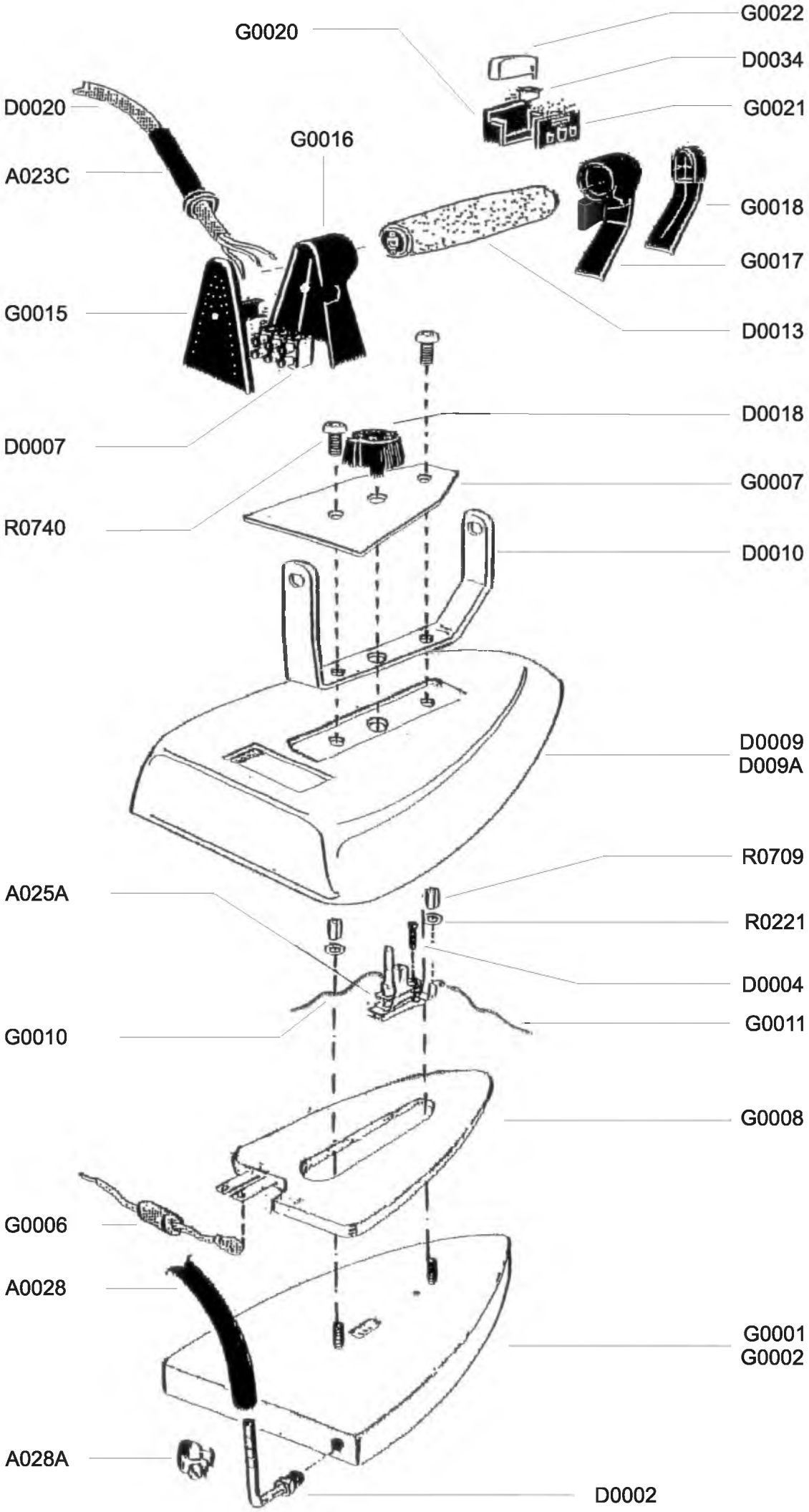

REF.	DESCRIPTION	Q*
A0028	Steam hose	1
A023C	Rubber sleeve	1
A025A	Thermostat	1
A028A	Steam hose clamp	1
D0002	Steam hose elbow	1
D0004	Screw	2
D0007	Junction box	1
D0009	Small chromium-plated cover	1
D009A	Big chromium-plated cover	1
D0010	Chromium-plated handle	1
D0013	Cork handle	1
D0018	Thermostat knob	1
D0020	Flex	1
D0034	Micro switch core	1
G0001	Small iron base	1
G0002	Big iron base	1
G0006	Thermal cut-out	1
G0007	Market tag	1
G0008	Heating element	1
G0010	Wire	1
G0011	Wire	1
G0015	Back cap	1
G0016	Back handle support	1
G0017	Front handle support	1
G0018	Front cap	1
G0020	Micro switch holder	1
G0021	Spacing tag	1
G0022	Blue micro switch button	1
R0221	Washer	2
R0709	Spacing cylinder	2
R0740	Screw	2