P 721

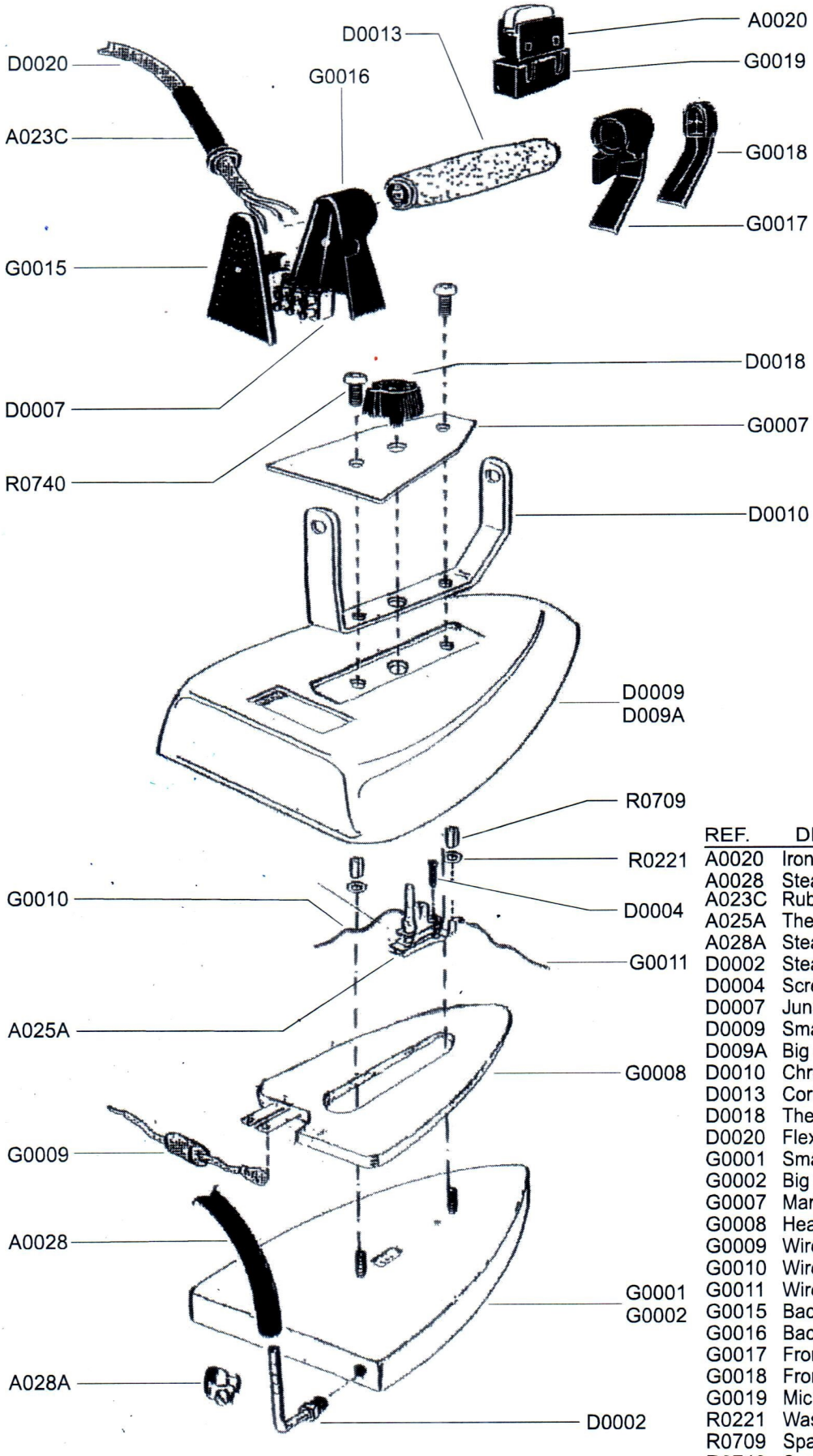


| REF. | DESCRIPTION | Q* |
|---|---|---|
| A0020 | Iron microswitch | 1 |
| A0028 | Steam hose | 1 |
| A023C | Rubber sleeve | 1 |
| A025A | Thermostat | 1 |
| A028A | Steam hose clamp | 1 |
| D0002 | Steam hose elbow | 1 |
| D0004 | Screw | 2 |
| D0007 | Junction box | 1 |
| D0009 | Small chromium-plated cover | 1 |
| D009A | Big chromium-plated cover | 1 |
| D0010 | Chromium-plated handle | 1 |
| D0013 | Cork handle | 1 |
| D0018 | Thermostat knob | 1 |
| D0020 | Flex | 1 |
| G0001 | Small iron base | 1 |
| G0002 | Big iron base | 1 |
| G0007 | Marked tag | 1 |
| G0008 | Heating element | 1 |
| G0009 | Wire | 1 |
| G0010 | Wire | 1 |
| G0011 | Wire | 1 |
| G0015 | Back cap | 1 |
| G0016 | Back handle support | 1 |
| G0017 | Front handle support | 1 |
| G0018 | Front cap | 1 |
| G0019 | Microswitch holder | 1 |
| R0221 | Washer | 2 |
| R0709 | Spacing cylinder | 2 |
| R0740 | Screw | 2 |