MAGICVAPOR

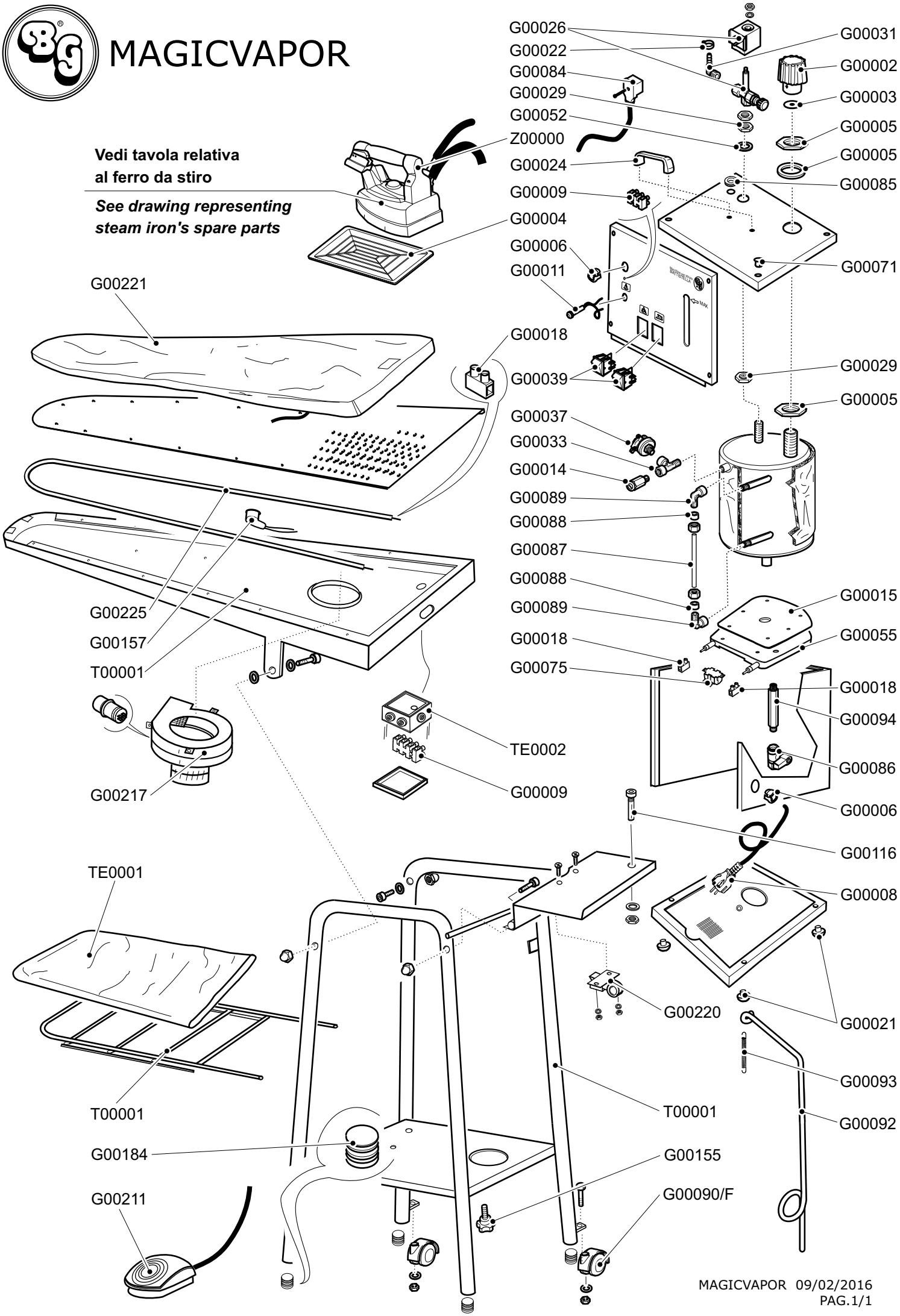

Vedi tavola relativa al ferro da stiro

See drawing representing steam iron's spare parts